2.1.1 **SITE NOTES:**
2.1.2 A LADDER WILL BE IN PLACE FOR INSPECTION IN COMPLIANCE WITH OSHA REGULATIONS.
2.1.3 THE PV MODULES ARE CONSIDERED NON-COMBUSTIBLE AND THIS SYSTEM IS A UTILITY INTERACTIVE SYSTEM WITH NO STORAGE BATTERIES.
2.1.4 THE SOLAR PV INSTALLATION WILL NOT OBSTRUCT ANY PLUMBING, MECHANICAL, OR BUILDING ROOF VENTS.
2.1.5 PROPER ACCESS AND WORKING CLEARANCE AROUND EXISTING AND PROPOSED ELECTRICAL EQUIPMENT WILL BE PROVIDED AS PER SECTION NEC 110.26.
2.1.6 ROOF COVERINGS SHALL BE DESIGNED, INSTALLED, AND MAINTAINED IN ACCORDANCE WITH THIS CODE AND THE APPROVED MANUFACTURER'S INSTRUCTIONS SUCH THAT THE ROOF COVERING SERVES TO PROTECT THE BUILDING OR STRUCTURE.

2.2.1 **EQUIPMENT LOCATIONS**
2.2.2 ALL EQUIPMENT SHALL MEET MINIMUM SETBACKS AS REQUIRED BY NEC 110.26.
2.2.3 WIRING SYSTEMS INSTALLED IN DIRECT SUNLIGHT MUST BE RATED FOR EXPECTED OPERATING TEMPERATURE AS SPECIFIED BY NEC 690.31 (A),(C) AND NEC TABLES 310.15 (B)(2)(A) .
2.2.4 RACKING, MID CLIPS, END CLIPS, AND MODULES 2703 LISTED
2.2.5 ADDITIONAL AC DISCONNECT(S) SHALL BE PROVIDED WHERE THE INVERTER IS NOT WITHIN SIGHT OF THE AC SERVICING DISCONNECT.
2.2.5 ALL EQUIPMENT SHALL BE INSTALLED ACCESSIBLE TO QUALIFIED PERSONNEL ACCORDING TO NEC APPLICABLE CODES.
2.2.6 ALL COMPONENTS ARE LISTED FOR THEIR PURPOSE AND RATED FOR OUTDOOR USAGE WHEN APPROPRIATE.

2.3.1 **STRUCTURAL NOTES:**
2.3.2 RACKING SYSTEM & PV ARRAY WILL BE INSTALLED ACCORDING TO CODE-COMPLIANT INSTALLATION MANUAL. TOP CLAMPS REQUIRE A DESIGNATED SPACE BETWEEN MODULES, AND RAILS MUST ALSO EXTEND A MINIMUM DISTANCE BEYOND EITHER EDGE OF THE ARRAY/SUBARRAY, ACCORDING TO RAIL MANUFACTURER'S INSTRUCTIONS.
2.3.3 JUNCTION BOX WILL BE INSTALLED PER MANUFACTURERS' SPECIFICATIONS. IF ROOF-PENETRATING TYPE, IT SHALL BE FLASHED & SEALED PER LOCAL REQUIREMENTS.
2.3.4 ROOFTOP PENETRATIONS FOR PV RACEWAY WILL BE COMPLETED AND SEALED W/ APPROVED CHEMICAL SEALANT PER CODE BY A LICENSED CONTRACTOR.
2.3.5 ALL PV RELATED ROOF ATTACHMENTS TO BE SPACED NO GREATER THAN THE SPAN DISTANCE SPECIFIED BY THE RACKING MANUFACTURER.
2.3.6 WHEN POSSIBLE, ALL PV RELATED RACKING ATTACHMENTS WILL BE STAGGERED AMONGST THE ROOF FRAMING MEMBERS.

2.4.1 **GROUNDING NOTES:**
2.4.2 GROUNDING SYSTEM COMPONENTS SHALL BE LISTED FOR THEIR PURPOSE, AND GROUNDING DEVISES EXPOSED TO THE ELEMENTS SHALL BE RATED FOR SUCH USE.
2.4.3 AS IN CONVENTIONAL PV SYSTEMS, UNGROUNDED PV SYSTEMS REQUIRE AN EQUIPMENT GROUNDING CONDUCTOR. ALL METAL ELECTRICAL EQUIPMENT AND STRUCTURAL COMPONENTS BONDED TO GROUND, IN ACCORDANCE WITH 250.134 OR 250.136(A). ONLY THE DC CONDUCTORS ARE UNGROUNDED.
2.4.4 PV EQUIPMENT SHALL BE GROUNDED ACCORDING TO NEC 690.43 AND MINIMUM NEC TABLE 250.122.
2.4.5 METAL PARTS OF MODULE FRAMES, MODULE RACKING, AND ENCLOSURE CONSIDERED GROUNDED IN ACCORD WITH 250.134 AND 250.136(A).
2.4.7 THE GROUNDING CONNECTION TO A MODULE SHALL BE ARRANGED SUCH THAT THE REMOVAL OF A MODULE DOES NOT INTERRUPT A GROUNDING CONDUCTOR TO ANOTHER MODULE.
2.4.8 GROUNDING AND BONDING CONDUCTORS, IF INSULATED, SHALL BE COLORED GREEN OR MARKED GREEN IF #4 AWG OR LARGER [NEC 250.119]
2.4.9 THE GROUNDING ELECTRODE SYSTEM COMPLIES WITH NEC 250.50 THROUGH 250.106. IF EXISTING SYSTEM IS INACCESSIBLE, OR INADEQUATE, A GROUNDING ELECTRODE SYSTEM PROVIDED ACCORDING TO NEC 250, AND AHJ.
2.4.11 IN UNGROUNDED INVERTERS, GROUND FAULT PROTECTION IS PROVIDED BY "ISOLATION MONITOR INTERRUPTOR," AND GROUND FAULT DETECTION PERFORMED BY "RESIDUAL-CURRENT DETECTOR."

2.5.1 **INTERCONNECTION NOTES:**
2.5.3 THE SUM OF THE UTILITY OCPD AND INVERTER CONTINUOUS INPUT MAY NOT EXCEED 120% OF BUSBAR RATING [NEC 705.12(B)(1) (2).
2.5.4 WHEN SUM OF THE PV SOURCES EQUALS >100% OF BUSBAR RATING, PV DEDICATED BACKFFED BREAKERS MUST BE LOCATED OPPOSITE END OF THE BUS FROM THE UTILITY SOURCE OCPD [NEC 705.12(B)(2)(3)].
2.5.5 AT MULTIPLE INVERTERS OUTPUT COMBINER PANEL, TOTAL RATING OF ALL OVERCURRENT DEVICES SHALL NOT EXCEED AMPACITY OF BUSBAR. HOWEVER, THE COMBINED OVERCURRENT DEVICE MAY BE EXCLUDED ACCORDING TO NEC 705.12 (B)(2)(3).
2.5.6 FEEDER TAP INTERCONECTION (LOAD SIDE) ACCORDING TO NEC 705.12 (B)(2)(1)
2.5.7 SUPPLY SIDE TAP INTERCONNECTION ACCORDING TO NEC 705.12 (A) WITH SERVICE ENTRANCE CONDUCTORS IN ACCORDANCE WITH NEC 230.42
2.5.8 BACKFEEDING BREAKER FOR UTILITY-INTERACTIVE INVERTER OUTPUT IS EXEMPT FROM ADDITIONAL FASTENING [NEC 705.12 (B)(5)].

2.6.1 **DISCONNECTION AND OVER-CURRENT PROTECTION NOTES:**
2.6.2 DISCONNECTING SWITCHES SHALL BE WIRED SUCH THAT WHEN THE SWITCH IS OPENED THE CONDUCTORS REMAINING ENERGIZED ARE CONNECTED TO THE TERMINALS MARKED "LINE SIDE" (TYPICALLY THE UPPER TERMINALS).
2.6.3 DISCONNECTS TO BE ACCESSIBLE TO QUALIFIED UTILITY PERSONNEL, BE LOCKABLE, AND BE A VISIBLE-BREAK SWITCH.
2.6.4 BOTH POSITIVE AND NEGATIVE PV CONDUCTORS ARE UNGROUNDED. THEREFORE BOTH MUST OPEN WHERE A DISCONNECT IS REQUIRED, ACCORDING TO NEC 690.13.
2.6.5 DC DISCONNECT INTEGRATED INTO ROOFTOP DC COMBINER OR INSTALLED WITHIN 10 FT, ACCORDING TO NEC 690.15 (A).
2.6.6 RAPID SHUTDOWN OF ENERGIZED CONDUCTORS INSIDE THE ARRAY BOUNDARY SHALL BE LISTED OR FIELD LABELED AS A RAPID SHUTDOWN PV ARRAY. SUCH A PV ARRAY SHALL BE INSTALLED AND USED IN ACCORDANCE WITH THE INSTRUCTIONS INCLUDED WITH THE RAPID SHUTDOWN PV ARRAY LISTING OR FIELD LABELING.
RAPID SHUTDOWN OF ENERGIZED CONDUCTORS BEYOND 1 FT OF PV ARRAY OR 3 FT INSIDE A BUILDING WITHIN 10 SECONDS. CONTROLLED CONDUCTORS ≤30V AND ≤240VA [NEC 690.12(B)(1)]. LOCATION OF LABEL ACCORDING TO AHJ.
2.6.7 ALL OCPD RATINGS AND TYPES SPECIFIED ACCORDING TO NEC 690.8, 690.9, AND 240.
2.6.8 BOTH POSITIVE AND NEGATIVE PV CONDUCTORS ARE UNGROUNDED, THEREFORE BOTH REQUIRE OVER-CURRENT PROTECTION, ACCORDING TO NEC 240.21. (SEE EXCEPTION IN NEC 690.9)
2.6.9 IF REQUIRED BY AHJ, SYSTEM WILL INCLUDE ARC-FAULT CIRCUIT PROTECTION ACCORDING TO NEC 690.11 AND UL1699B.

2.7.1 **WIRING & CONDUIT NOTES:**
2.7.2 ALL CONDUIT AND WIRE WILL BE LISTED AND APPROVED FOR THEIR PURPOSE. CONDUIT AND WIRE SPECIFICATIONS ARE BASED ON MINIMUM CODE REQUIREMENTS AND ARE NOT MEANT TO LIMIT UP-SIZING.
2.7.3 ALL CONDUCTORS SIZED ACCORDING TO NEC 690.8, NEC 690.7.
2.7.4 EXPOSED UNGROUNDED PV SOURCE AND OUTPUT CIRCUITS SHALL USE WIRE LISTED AND IDENTIFIED AS PHOTOVOLTAIC (PV) WIRE [690.35 (D)]. PV MODULES WIRE LEADS SHALL BE LISTED FOR USE WITH UNGROUNDED SYSTEMS, ACCORDING TO NEC 690.35 (D)(3).
2.7.5 PV WIRE BLACK WIRE MAY BE FIELD-MARKED WHITE [NEC 200.6 (A)(6)].
2.7.6 MODULE WIRING SHALL BE LOCATED AND SECURED UNDER THE ARRAY.
2.7.7 RACKING, MID CLIPS, END CLIPS, AND MODULES 2703 LISTED
2.7.8 AC CONDUCTORS COLORED OR MARKED AS FOLLOWS:
PHASE A OR L1- BLACK
PHASE B OR L2- RED, OR OTHER CONVENTION IF THREE PHASE
PHASE C OR L3- BLUE, YELLOW, ORANGE*, OR OTHER CONVENTION
NEUTRAL- WHITE OR GREY

* IN 4-WIRE DELTA CONNECTED SYSTEMS THE PHASE WITH HIGHER VOLTAGE TO BE MARKED ORANGE [NEC 110.15].

SYMBOL LEGEND

E	MAIN ENTRANCE DOOR	CBR	COMBINER BOX	M	(E) UTILITY METER		PROPERTY LINE
MEP	MAIN ELECTRICAL PANEL	TB	TAP BOX	V	PV REVENUE METER		ROOF RAFTERS
JB	JUNCTION BOX	SUB	SUB (AC) PANEL	U	UTILITY POLE		MODULE STRINGING
S	AC DISCONNECT	MM	METER/MAIN	A	MODULE STRINGING		EQUIPMENT GROUND
I	DC/AC INVERTER	RSD	RAPID SHUTDOWN	B	MODULE STRINGING		CONDUIT
DCSW	DC DISCONNECT	CBR	(DC) COMBINER BOX	C	MODULE STRINGING		FIRE CLEARANCE
PNL	AC PANELBOARD			D	MODULE STRINGING		

SOLAR (PV) MODULE
RAILS
ATTACHMENTS
26 SHEET KEYNOTE INDICATOR
D1 A-201 DETAIL INDICATOR
01 A-201 ELEVATION INDICATOR
N W E S NORTH INDICATOR

DISCLAIMER: PLEASE NOTE THAT THE ABBREVATIONS, ANNOTATIONS, AND SYMBOLS LISTED ARE INTENDED TO ILLUSTRATE THOSE THAT ARE COMMONLY USED, NOT ALL ARE NECESSARILY UTILIZED WITHIN THIS SET OF DRAWINGS.

NEW PV SYSTEM: 486.140 kWp DC
GROVES K-12 SOLAR PV

100 PRISCILLA D. THOMAS WAY
GARDEN CITY, GA 31408

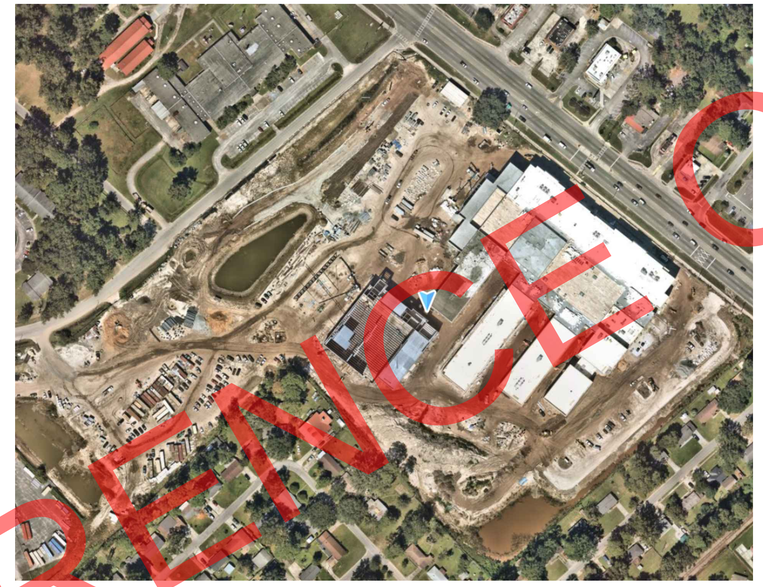

01 AERIAL PHOTO
NOT TO SCALE

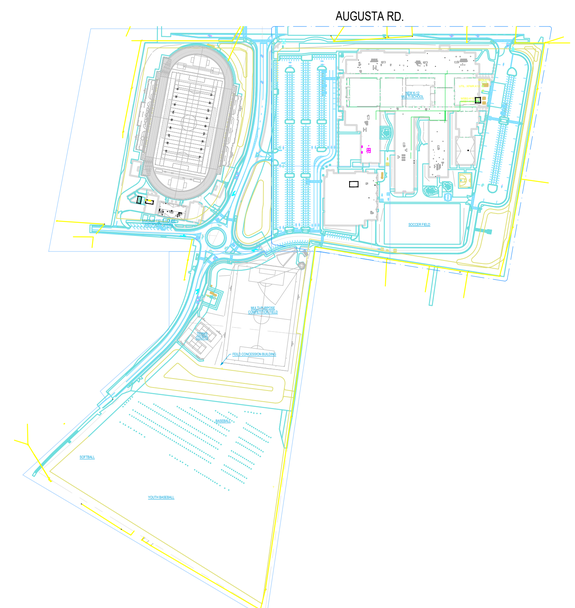

02 PLAT MAP
NOT TO SCALE

SHEET LIST TABLE

Sheet Number	Sheet Title
T-001	COVER PAGE
A-101	SITE PLAN
A-102	ELECTRICAL PLAN (SYSTEM-1) (K-12)
A-103	ELECTRICAL PLAN (SYSTEM-2) (MULTI-MEDIA)
A-104	ELECTRICAL PLAN (SYSTEM-3) (FIELDHOUSE)
E-601	THREE LINE DIAGRAM (SYSTEM-1) (K-12)
E-602	PLACARDS (SYSTEM-1) (K-12)
E-603	THREE LINE DIAGRAM (SYSTEM-2) (MULTI-MEDIA)
E-604	PLACARDS (SYSTEM-2) (MULTI-MEDIA)
E-605	THREE LINE DIAGRAM (SYSTEM-3) (FIELDHOUSE)
E-606	PLACARDS (SYSTEM-3) (FIELDHOUSE)
R-001	RESOURCE DOCUMENTS

Structural Sheet Name
S1.0
S1.1
S1.2
S1.3
S1.4
S1.5
S1.6
S1.7
S1.8
S1.9
S1.10
S1.11
S2.0

PROJECT INFORMATION

OWNER
NAME: GROVES K-12 SOLAR PV

PROJECT MANAGER
NAME: DERREK HARMON
PHONE: (706) 498-3223

CONTRACTOR
NAME: ALTERNATIVE ENERGY SOUTHEAST
PHONE: (770) 490-6178

APPLICABLE CODES & STANDARDS
ELECTRICAL: NEC, 2020 EDITION, WITH GEORGIA AMENDMENTS
BUILDING: IBC, 2018 EDITION, WITH GEORGIA AMENDMENTS
FIRE: IFC, 2018 EDITION
AHJ: GARDEN CITY
UTILITY: GEORGIA POWER CO.

LOT INFORMATION
LEGAL DESCRIPTION:
ASSESSOR PARCEL:
ZONING TYPE: COMMERCIAL
LAND USE CODE:

SCOPE OF WORK
SYSTEM SIZE: STC: 892 X 545 = 486.140 KW DC

(892) SOLARJUICE AMERICAN INC.
S4AI-144B-545C
(5) SMA SUNNY TRIPOWER CORE1 62-US
(2) SMA SUNNY TRIPOWER CORE1 50-US
412.5 KW AC

SYSTEM 1: STC: 750 X 545 = 408.75 KW DC
(750) SOLARJUICE AMERICAN INC. S4AI-144B-545C
(5) SMA SUNNY TRIPOWER CORE1 62-US
312.5 KW AC

SYSTEM 2: STC: 94 X 545 = 51.23 KW DC
(94) SOLARJUICE AMERICAN INC. S4AI-144B-545C
(1) SMA SUNNY TRIPOWER CORE1 50-US
50.0 KW AC

SYSTEM 3: STC: 48 X 545 = 26.16 KW DC
(48) SOLARJUICE AMERICAN INC. S4AI-144B-545C
(1) SMA SUNNY TRIPOWER CORE1 50-US
50.0 KW AC

ATTACHMENT TYPE: BX5 IRONRIDGE

MSP UPGRADE: NO

Alternative Energy Southeast

CONTRACTOR
ALTERNATIVE ENERGY SOUTHEAST, INC.
PHONE: (770) 490-6178
LIC. NO.: EN216661

UNAUTHORIZED USE OF THIS DRAWING SET WITHOUT WRITTEN PERMISSION FROM CONTRACTOR IS IN VIOLATION OF U.S. COPYRIGHT LAWS AND WILL BE SUBJECT TO CIVIL DAMAGES AND PROSECUTIONS.

REVISION / RELEASE

NO.	DESCRIPTION	DATE

PROJECT
NEW PV SYSTEM: 486.140 kWp DC
GROVES K-12 SOLAR PV
100 PRISCILLA D. THOMAS WAY
GARDEN CITY, GA 31408

ENGINEER OF RECORD

PAPER SIZE: 36" x 24" (ARCH D)

SHEET TITLE:
COVER PAGE
(SHEET 1)

DATE: 7.11.2023
DESIGN BY: SC
CHECKED BY: C.B.
SHEET NUMBER:
T-001.00

FOR REFERENCE ONLY

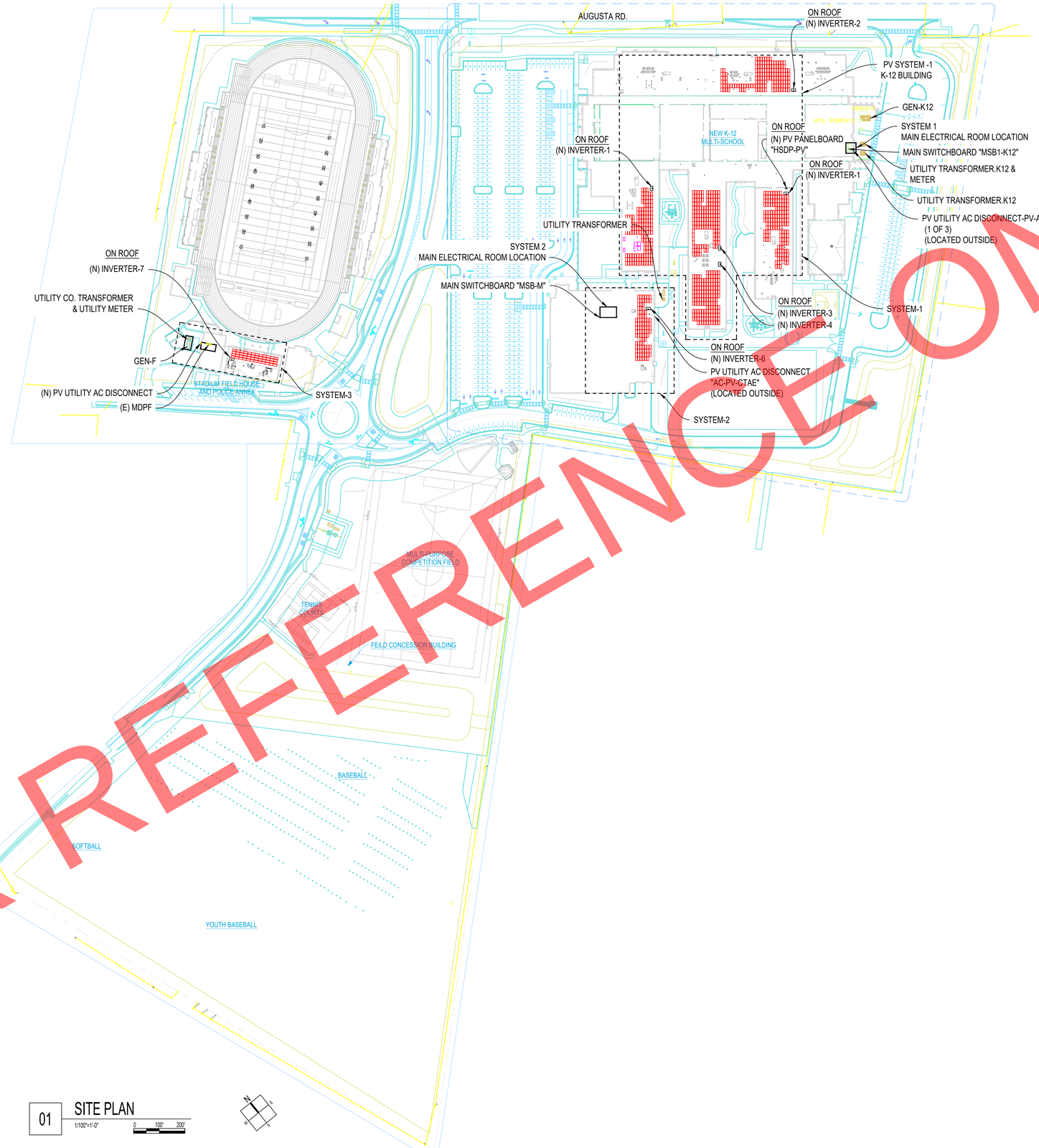

01 SITE PLAN

1/100"=1'-0"

0 100' 200'

GENERAL NOTES

1. FIELD VERIFY ALL MEASUREMENTS
2. SEE SHEET T-001 FOR LEGEND OF SYMBOLS
3. INVERTER TO BE MOUNTED WITH 1' OF ARRAY TO SATISFY RSD REQUIREMENTS AS PER NEC 690.12.
   IRONRIDGE BX SYSTEM IS UL3741 LISTED TO THE PV HAZARD CONTROL STANDARD. COMPLY WITH ALL INSTRUCTIONS IN INSTALATION MANUAL TO MAINTAIN LISTING.
4. TYPICAL: ARLINGTON ROOF TOPPER "RTSE4" OR "RTSE12" AT CONDUIT CROSSING(S) WITH SLED BASE. ROOFTOP SUPPORTS SHALL BE LOCATED WITHIN 2' OF ALL BENDS, BOXES, AND TRANSITIONS TO FLEX. SUPPORTS SHALL BE MAXIMUM 10' APART.

FOR REFERENCE ONLY

Alternative Energy Southeast

CONTRACTOR

ALTERNATIVE ENERGY SOUTHEAST, INC.
PHONE: (770) 490-6178
LIC. NO.: EN216661

UNAUTHORIZED USE OF THIS DRAWING SET WITHOUT WRITTEN PERMISSION FROM CONTRACTOR IS IN VIOLATION OF U.S. COPYRIGHT LAWS AND WILL BE SUBJECT TO CIVIL DAMAGES AND PROSECUTIONS.

REVISION / RELEASE

NO.	DESCRIPTION	DATE

PROJECT

NEW PV SYSTEM: 486.140 kWp DC

GROVES K-12 SOLAR PV

100 PRISCILLA D. THOMAS WAY
GARDEN CITY, GA 31408

ENGINEER OF RECORD

PAPER SIZE: 36" x 24" (ARCH D)

SHEET TITLE:

SITE PLAN

(SHEET 2)

DATE: 7.11.2023

DESIGN BY: SC

CHECKED BY: C.B.

SHEET NUMBER:

A-101.00

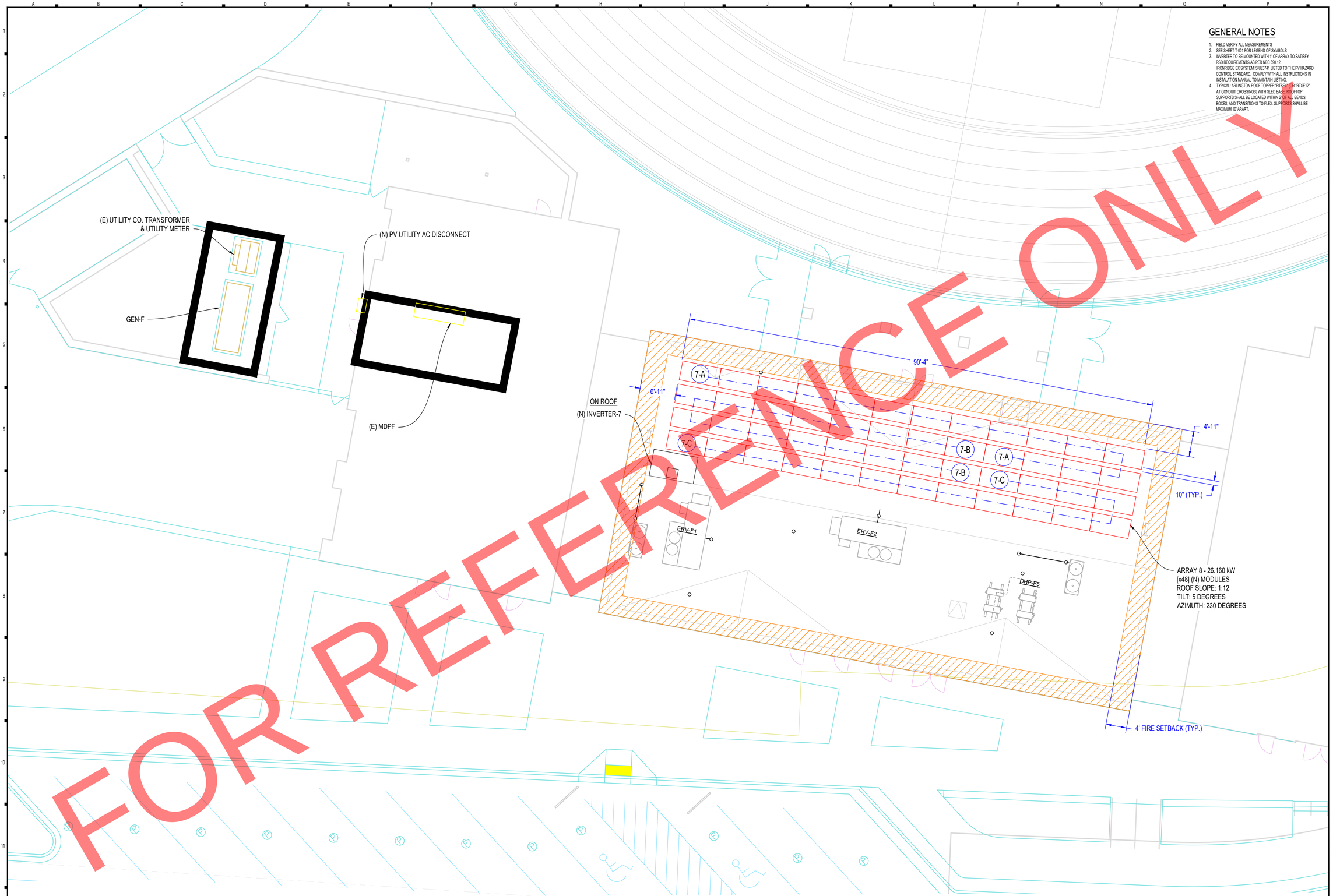

GENERAL NOTES

1. FIELD VERIFY ALL MEASUREMENTS
2. SEE SHEET T-001 FOR LEGEND OF SYMBOLS
3. INVERTER TO BE MOUNTED WITH 1' OF ARRAY TO SATISFY RSD REQUIREMENTS AS PER NEC 690.12.
   IRONRIDGE BX SYSTEM IS UL3741 LISTED TO THE PV HAZARD CONTROL STANDARD. COMPLY WITH ALL INSTRUCTIONS IN INSTALATION MANUAL TO MAINTAIN LISTING.
4. TYPICAL: ARLINGTON ROOF TOPPER "RTSE4" OR "RTSE12" AT CONDUIT CROSSINGS) WITH SLED BASE. ROOFTOP SUPPORTS SHALL BE LOCATED WITHIN 2'-0" OF ALL BENDS, BOXES, AND TRANSITIONS TO FLEX. SUPPORTS SHALL BE MAXIMUM 10' APART.

01 ELECTRICAL PLAN
1/8"=1'-0"
0 8' 16'

MODULE:
SOLARJUICE AMERICAN INC.
SAAI-144B-545C
545 WATTS
89.96"
44.61"

Alternative Energy Southeast

CONTRACTOR

ALTERNATIVE ENERGY SOUTHEAST, INC.

PHONE: (770) 490-6178

LIC. NO.: EN216661

UNAUTHORIZED USE OF THIS DRAWING SET WITHOUT WRITTEN PERMISSION FROM CONTRACTOR IS IN VIOLATION OF U.S. COPYRIGHT LAWS AND WILL BE SUBJECT TO CIVIL DAMAGES AND PROSECUTIONS.

REVISION / RELEASE

NO.	DESCRIPTION	DATE

PROJECT

NEW PV SYSTEM: 486.140 kWp DC

GROVES K-12 SOLAR PV

100 PRISCILLA D. THOMAS WAY
GARDEN CITY, GA 31408

ENGINEER OF RECORD

PAPER SIZE: 36" x 24" (ARCH D)

SHEET TITLE:
ELECTRICAL PLAN (SYSTEM-3)
(FIELDHOUSE)

(SHEET 5)

DATE: 7.11.2023

DESIGN BY: SC

CHECKED BY: C.B.

SHEET NUMBER:

A-104.00

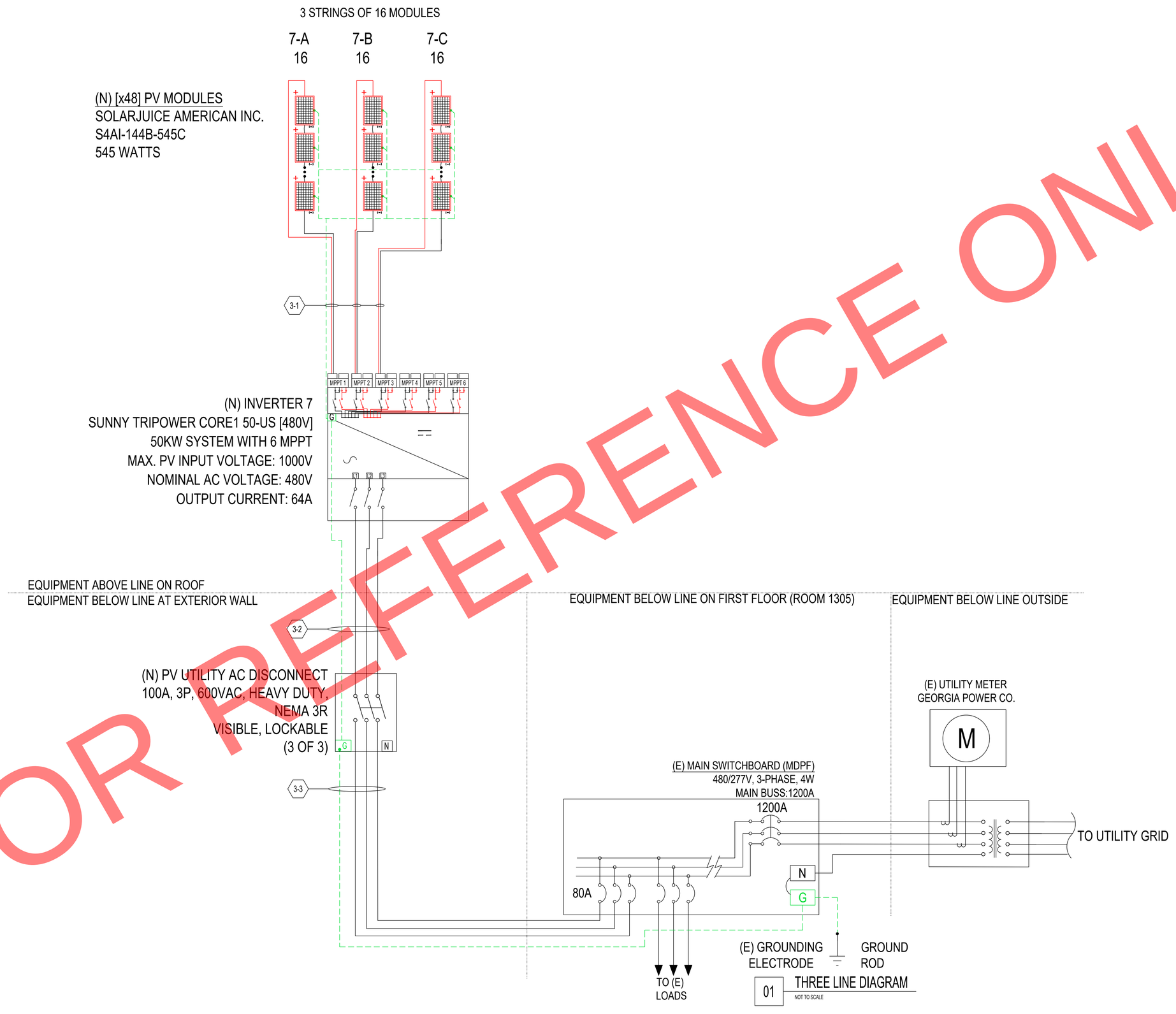

01 THREE LINE DIAGRAM

NOT TO SCALE

FOR REFERENCE ONLY

Alternative Energy Southeast

CONTRACTOR

ALTERNATIVE ENERGY SOUTHEAST, INC.

PHONE: (770) 490-6178

LIC. NO.: EN216661

UNAUTHORIZED USE OF THIS DRAWING SET WITHOUT WRITTEN PERMISSION FROM CONTRACTOR IS IN VIOLATION OF U.S. COPYRIGHT LAWS AND WILL BE SUBJECT TO CIVIL DAMAGES AND PROSECUTIONS.

REVISION / RELEASE

NO.	DESCRIPTION	DATE

PROJECT

NEW PV SYSTEM: 486.140 kWp DC

GROVES K-12 SOLAR PV

100 PRISCILLA D. THOMAS WAY
GARDEN CITY, GA 31408

ENGINEER OF RECORD

PAPER SIZE: 36" x 24" (ARCH D)

SHEET TITLE:
THREE LINE DIAGRAM (SYSTEM-3)
(FIELDHOUSE)

(SHEET 10)

DATE: 7.11.2023

DESIGN BY: SC

CHECKED BY: C.B.

SHEET NUMBER:

E-605.00

SYSTEM SUMMARY	
	INVERTER #7 MPPT 1-3
INVERTER STRINGING	A-C
MODULE COUNT	16
NOMINAL STR. VOLTAGE (VMP @ AMBIENT TEMP)	668.8V
STRING VOLTAGE (VOC @ LOW TEMP)	862V
STRING ARRAY OPERATING CURRENT	13.95A
STRING ARRAY STC POWER	8,720W
TOTAL STC POWER INVERTER-7	26,160W
TOTAL INVERTER AC CURRENT	64A
TOTAL INVERTER AC POWER	50,000W

DESIGN TEMPERATURES	
ASHRAE EXTREME LOW	-7°C (19.4F), SOURCE: SAVANNAH INTL AP
ASHRAE 2% HIGH	35°C (95.0F), SOURCE: SAVANNAH INTL AP

MODULE								
QTY.	MAKE AND MODEL	PMAX	ISC	IMP	VOC	VMP	TEMP. COEFF. OF VOC	FUSE RATING
48	SOLARJUICE AMERICAN INC. S4AI-144B-545C	545W	13.95A	13.05A	49.65V	41.8V	-0.144V/°C (-0.290%/°C)	25A

INVERTER									
QTY.	MAKE AND MODEL	AC VOLTAGE	GROUND	MIN OCPD RATING	RATED POWER	MAX OUTPUT CURRENT	MAX INPUT CURRENT	MAX INPUT VOLTAGE	CEC EFFICIENCY
1	SMA SUNNY TRIPOWER CORE1 50-US	480V	FLOATING	80A	50W	64A	120A	1000V	97.5%

OCPD		
QTY.	RATED CURRENT	MAX VOLTAGE
1	80A	480VAC

CONDUCTOR AND CONDUIT SCHEDULE W/ELECTRICAL CALCULATIONS																
ID	TYPICAL	CONDUCTOR	CONDUIT	CURRENT-CARRYING CONDUCTORS IN CONDUIT	OCPD	EGC	TEMP. CORR. FACTOR	CONDUIT FILL FACTOR	CONT. CURRENT	MAX. CURRENT (125*125% FOR DC,125% FOR AC)	BASE AMP.	DERATED AMP.	TERM. TEMP. RATING	AMP. @ TERMINAL	LENGTH (FT)	VOLTAGE DROP %
3-1	3	10 AWG PV WIRE(1000V), COPPER	N/A	FREE AIR	N/A	6 AWG BARE, COPPER	0.96 (35°C)	1.0	13.95A	21.8A	55A	52.8A	60°C	40A	30	0.12
3-2	1	3 AWG XHHW-2, COPPER	1" IMC	3	N/A	8 AWG XHHW-2, COPPER	0.96 (35°C)	1.0	64A	80A	115A	110.4A	60°C	85A	70	0.50
3-3	1	3 AWG XHHW-2, COPPER	1" IMC	3	80A	8 AWG XHHW-2, COPPER	0.96 (35°C)	1.0	64A	80A	115A	110.4A	60°C	85A	10	0.07

VOLTAGE DROP	
	INVERTER-7
DC DROP	0.32
AC DROP	0.57
TOTAL Vdrop	0.89

! CAUTION!

POWER TO THIS BUILDING IS ALSO SUPPLIED FROM ROOF MOUNTED SOLAR ARRAYS WITH SAFETY DISCONNECTS AS SHOWN:

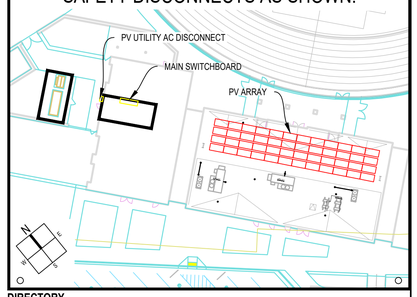

! WARNING !
ELECTRIC SHOCK HAZARD.
THE DC CONDUCTORS OF THIS PHOTOVOLTAIC SYSTEM ARE UNGROUNDED AND MAY BE ENERGIZED.

PLACARD 3
AT EACH JUNCTION, COMBINER, DISCONNECT AND DEVICE WHERE ENERGIZED UNGROUNDED CONDUCTORS MAY BE EXPOSED DURING SERVICE
[NEC 690.35(F)]

! WARNING !
ELECTRIC SHOCK HAZARD
DO NOT TOUCH TERMINALS.
TERMINALS ON BOTH LINE AND LOAD SIDES MAY BE ENERGIZED IN THE OPEN POSITION.

LABEL 1
AT EACH DISCONNECTING MEANS FOR PHOTOVOLTAIC EQUIPMENT
[NEC 690.17]

MAX INPUT CURRENT: 13.95 A DC
OPERATING VOLTAGE: 668.8 V DC
MAX SHORT CURRENT: 30 A DC
MAX VOLTAGE: 1000 V DC

LABEL 2 INVERTERS
AT EACH APPLICABLE DC DISCONNECTING MEANS
[NEC 690.53]

PHOTOVOLTAIC AC DISCONNECT
OPERATING CURRENT: 64 A AC
OPERATING VOLTAGE: 480 V AC

LABEL 3
AT POINT OF INTERCONNECTION, MARKED AT DISCONNECTING MEANS
[NEC 690.54]

! WARNING !
DUAL POWER SOURCES. SECOND SOURCE IS PV SYSTEM

LABEL 4
AT POINT OF INTERCONNECTION; LABEL SUCH AS LABEL 5 OR LABEL 6 MUST IDENTIFY PHOTOVOLTAIC SYSTEM
[NEC 705.12(D)(4)]

! CAUTION !
PHOTOVOLTAIC SYSTEM CIRCUIT IS BACKFED

LABEL 5

WARNING: PHOTOVOLTAIC POWER SOURCE

LABEL 6
AT EXPOSED RACEWAYS, CABLE TRAYS, AND OTHER WIRING METHODS; SPACED AT MAXIMUM 10 FT SECTION OR WHERE SEPARATED BY ENCLOSURES, WALLS, PARTITIONS, CEILINGS, OR FLOORS. [NEC 690.31(G)]
LETTERS AT LEAST 3/8 INCH; WHITE ON RED BACKGROUND; REFLECTIVE [IFC 605.11.1.1]

PHOTOVOLTAIC SYSTEM EQUIPPED WITH RAPID SHUTDOWN

LABEL 7
AT RAPID SHUTDOWN SWITCH
[NEC 690.56(B)].
LETTERS AT LEAST 3/8 INCH; WHITE ON RED BACKGROUND; REFLECTIVE [IFC 605.11.1.1]

! WARNING !
INVERTER OUTPUT CONNECTION. DO NOT RELOCATE THIS OVERCURRENT DEVICE

LABEL 12
AT POINT OF INTERCONNECTION OVERCURRENT DEVICE
[NEC 705.12(D)(7)]

RAPID SHUTDOWN SWITCH FOR SOLAR PV SYSTEM

LABEL 13
AT RAPID SHUTDOWN SWITCH
[NEC 690.56(B)].
LETTERS AT LEAST 3/8 INCH; WHITE ON RED BACKGROUND; REFLECTIVE [IFC 605.11.1.1]

PHOTOVOLTAIC DC DISCONNECT

LABEL 8
AT EACH DC DISCONNECTING MEANS
[NEC 690.13(B)]

INTERACTIVE PHOTOVOLTAIC SYSTEM CONNECTED
PHOTOVOLTAIC SYSTEM DISCONNECT LOCATED EXTERIOR WALL OF ELECTRICAL ROOM

PLAQUE

INTERACTIVE PHOTOVOLTAIC SYSTEM CONNECTED

LABEL 9
AT UTILITY METER
[NEC 690.56(B)]

PHOTOVOLTAIC AC DISCONNECT

LABEL 10
AT EACH AC DISCONNECTING MEANS
[NEC 690.13(B)]

SOLAR PV SYSTEM EQUIPPED WITH RAPID SHUTDOWN

TURN RAPID SHUTDOWN SWITCH TO THE "OFF" POSITION TO SHUT DOWN CONDUCTORS OUTSIDE THE ARRAY. CONDUCTORS WITHIN THE ARRAY REMAIN ENERGIZED IN SUNLIGHT.

LABEL 11
AT SYSTEM'S RAPID SHUTDOWN
[NEC 690.56(C)(1)(b)].

DIRECTORY

PERMANENT PLAQUE OR DIRECTORY PROVIDING THE LOCATION OF THE SERVICE DISCONNECTING MEANS AND THE PHOTOVOLTAIC SYSTEM DISCONNECTING MEANS IF NOT IN THE SAME LOCATION
[NEC 690.56(B)]
WHERE THE INVERTERS ARE REMOTELY LOCATED FROM EACH OTHER, A DIRECTORY IN ACCORDANCE WITH 705.10 SHALL BE INSTALLED AT EACH DC PV SYSTEM DISCONNECTING MEANS, AT EACH AC DISCONNECTING MEANS, AND AT THE MAIN SERVICE DISCONNECTING MEANS SHOWING THE LOCATION OF ALL AC AND DC PV SYSTEM DISCONNECTING MEANS IN THE BUILDING.
[NEC 690.4(H)]
LABELING NOTES
1.1 LABELING REQUIREMENTS BASED ON THE NEC, 2020 EDITION, WITH GEORGIA AMENDMENTS, INTERNATIONAL FIRE CODE 605.11, OSHA STANDARD 1910.145, ANSI Z535
1.2 MATERIAL BASED ON THE REQUIREMENTS OF THE AUTHORITY HAVING JURISDICTION.
1.3 LABELS TO BE OF SUFFICIENT DURABILITY TO WITHSTAND THE ENVIRONMENT INVOLVED.
1.4 LABELS TO BE A MINIMUM LETTER HEIGHT OF 3/8" AND PERMANENTLY AFFIXED.
1.5 ALERTING WORDS TO BE COLOR CODED. "DANGER" WILL HAVE RED BACKGROUND; "WARNING" WILL HAVE ORANGE BACKGROUND; "CAUTION" WILL HAVE YELLOW BACKGROUND. [ANSI Z535]

FOR REFERENCE ONLY

Alternative Energy Southeast

CONTRACTOR
ALTERNATIVE ENERGY SOUTHEAST, INC.
PHONE: (770) 490-6178
LIC. NO.: EN216661

UNAUTHORIZED USE OF THIS DRAWING SET WITHOUT WRITTEN PERMISSION FROM CONTRACTOR IS IN VIOLATION OF U.S. COPYRIGHT LAWS AND WILL BE SUBJECT TO CIVIL DAMAGES AND PROSECUTIONS.

REVISION / RELEASE

NO.	DESCRIPTION	DATE

PROJECT

NEW PV SYSTEM: 486.140 kWp DC

GROVES K-12 SOLAR PV

100 PRISCILLA D. THOMAS WAY
GARDEN CITY, GA 31408

ENGINEER OF RECORD

PAPER SIZE: 36" x 24" (ARCH D)

SHEET TITLE:
PLACARDS (SYSTEM-3) (FIELDHOUSE)
(SHEET 11)

DATE: 7.11.2023
DESIGN BY: SC
CHECKED BY: C.B.
SHEET NUMBER:
E-606.00

SOLAR4AMERICA

144 HALF-CELL | TRANSPARENT

S4AI-144B-550C

High Efficiency Low LID
9BB Half-Cut Bifacial Perc
Mono Crystalline Module

530W-550W

MODULE EFFICIENCY
21.2%

HIGH POWER OUTPUT
550W

PERFORMANCE WARRANTY

12 YEARS product warranty

25 YEARS linear power warranty

KEY FEATURES

9BB Half-Cut Cell Technology
New circuit design, lower internal current, lower RS loss GA doped wafer

Significantly Lower the Risk of Hot Spot
Special circuit design with much lower hot spot temperature

Excellent Anti-PID Performance
2 times of industry standard Anti-PID test by TUV SUD

Lower LCOE
2% more power generation

IP68 Junction Box
High waterproof level

Solarjuice American Inc.
6950 Preston Avenue, Livermore, CA 94551
888-575-1940
www.solar4america.com
customercare@solar4america.com

Cut Sheet

S4AI-144B-550C

144 Half-Cell | High Efficiency Low LID | 9BB Half-Cut Bifacial Pwec | Mono Crystalline Module | Transparent

ELECTRICAL PARAMETERS

Module	S4AI-144B				
Maximum Power at STC(Pmax)	530W	535W	540W	545W	550W
Open-Circuit Voltage(Voc)	49.20V	49.35V	49.50V	49.65V	49.80V
Short-Circuit Current(Isc)	13.76A	13.83A	13.90A	13.95A	14.00A
Optimum Operating Voltage (Vmp)	41.35V	41.50V	41.65V	41.80V	41.95V
Optimum Operating Current(Imp)	12.83A	12.90A	12.97A	13.05A	13.12A
Module Efficiency	20.5%	20.7%	20.9%	21.1%	21.2%
Power Tolerance	0 ~ +5W				
Maximum System Voltage	1500V DC(UL/IEC)				
Maximum Series Fuse Rating	25A				
Operating Temperature	-40℃ to + 85℃				

*STC:Irradiance 1000W/m², module temperature 25, AM=1.5
Optional black frame or white frame module according to customer requirements

NMOT

Module	S4AI-144B				
Maximum Power	396W	400W	404W	408W	412W
Open Circuit Voltage (Voc)	45.25V	45.40V	45.55V	45.70V	45.85V
Short Circuit Current (Isc)	11.22A	11.29A	11.36A	11.43A	11.50A
Maximum Power Voltage (Vmp)	37.49V	37.64V	37.79V	37.94V	38.09V
Maximum Circuit Current (Imp)	10.56A	10.63A	10.69A	10.75A	10.81A
NMOT	45℃±2℃				

*NMOT: Irradiance 800W/m², ambient temperature 20℃, wind speed 1 m/s

BIFACIAL REARSIDE POWER GAIN

Electrical characteristics with different rear side power gain for reference(reference to 380W front)

Module		S4AI-144B	Bifacial Rly: 70±5%			
Maximum Power	Pmax Gain	Voc/V	Isc/A	Vmp/V	Imp/A
562W	5%	49.35	14.52	41.50	13.54
589W	10%	49.35	15.21	41.50	14.19
619W	15%	49.35	15.90	41.50	14.82
642W	20%	49.35	16.59	41.50	15.47
669W	25%	49.35	17.29	41.50	16.12

*Effected gain the additional gain from the rear side compared to the power of the front side at the standard test condition.
It depends on mounting (structure, height, tilt angle etc.) and albedo of the ground.

MECHANICAL SPECIFICATION

Solar Cells	Monocrystalline 182 × 91 mm
No. of Cells	144 (6 × 24)
Dimensions	2285mm×1133mm×35mm
Weight	27.2kg
Front Glass	High transmission tempered glass
Frame	Anodized aluminum alloy
Junction Box	IP68
Cable	4mm²(UL/IEC); Length: (+) 400mm ; (-) 200mm / length can be customized
Connectors	MC4 / MC4-Compatible
Packaging Configuration	31pcs / box, 620pcs / 40'HQ Container

TEMPERATURE CHARACTERISTICS

Temperature Coefficient of Pmax	γ (Pm) -0.39%/
Temperature Coefficient of Voc	β (Voc) -0.29%/
Temperature Coefficient of Isc	α (Isc) 0.045%/

TECHNICAL DRAWINGS

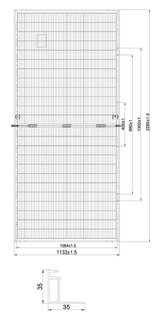

I-V CURVE

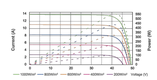

Cut Sheet

SUNNY TRIPOWER CORE1 33-US / 50-US / 62-US

SMA

Fully integrated

- No additional racking required for rooftop installation
- Integrated DC and AC disconnects and overvoltage protection
- 12 direct string inputs for reduced labor and material costs
- Up to 60% faster commercial PV system installation

Increased power, flexibility

- Six MPP trackers for flexible stringing and maximum power production
- ShadeFix, SMA's proprietary shade management solution optimizes at the string level
- Intelligent string monitoring to pinpoint array performance issues

Enhanced safety, reliability

- Integrated SunSpec PLC signal for module-level rapid shutdown compliance to 2017 NEC
- Newtown DC AFCI arc-fault protection certified to new Standard UL 1699B Ed. 1

Smart monitoring, control, service

- I-V curve diagnostic function to visualize and document PV string electrical characteristics
- Increased ROI with SMA ennexOS cross sector energy management platform
- SMA Smart Connected proactive O&M solution reduces time spent diagnosing and servicing in the field

SUNNY TRIPOWER CORE1 33-US / 50-US / 62-US

It stands on its own

The Sunny Tripower CORE1 is the world's first free-standing PV inverter for commercial rooftops, carports, ground mount and repowering legacy solar projects. From distribution to construction to operation, the Sunny Tripower CORE1 enables logistical, material, labor and service cost reductions, and is the most versatile, cost-effective commercial solution available. Integrated SunSpec PLC for rapid shutdown and enhanced DC AFCI arc-fault protection ensure compliance to the latest safety codes and standards. With Sunny Tripower CORE1 and SMA's ennexOS cross sector energy management platform, system integrators can deliver comprehensive commercial energy solutions for increased ROI.

www.SMA-America.com

Technical data	Sunny Tripower CORE1 33-US	Sunny Tripower CORE1 50-US	Sunny Tripower CORE1 62-US
Input (DC)			
Maximum array power	50000 Wp STC	75000 Wp STC	93750 Wp STC
Maximum system voltage		1000 V	
Rated MPP voltage range	330 V ... 800 V	500 V ... 800 V	550 V ... 800 V
MPPT operating voltage range		150 V ... 1000 V	
Minimum DC voltage / start voltage		150 V / 188 V	
MPP trackers/ strings per MPP input		6 / 2	
Maximum operating input current / per MPP tracker		120 A / 20 A	
Maximum short circuit current per MPPT / per string input		30 A / 30 A	
Output (AC)			
AC nominal power	33300 W	50000 W	62500 W
Maximum apparent power	33300 VA	53000 VA	66000 VA
Output phases / line connections		3 / 3 (N) PE	
Nominal AC voltage		480 V / 277 V WYE	
AC voltage range		244 V ...305 V	
Maximum output current	40 A	64 A	80 A
Rated grid frequency		60 Hz	
Grid frequency / range		50 Hz, 60 Hz / 4 Hz...+6Hz	
Power factor at rated power / adjustable displacement		1 / 0.0 leading ...0.0 lagging	
Harmonics THD		<3 %	
Efficiency			
CEC efficiency	97.5%	97.5%	97.5%
Protection and safety features			
Load rated DC disconnect		●	
Load rated AC disconnect		●	
Ground fault monitoring / Ensu / Differential current		●/●	
DC AFCI arc-fault protection		●	
SunSpec PLC signal for rapid shutdown		●	
DC reverse polarity protection		●	
AC short circuit protection		●	
DC surge protection: Type 2 / Type 1+2		O / O	
AC surge protection: Type 2 / Type 1+2		O / O	
Protection class / overvoltage category (as per UL 840)		I / IV	
General data			
Device dimensions (W / H / D)	621 mm / 733 mm / 569 mm (24.4 in x 28.8 in x 22.4 in)		
Device weight	84 kg (185 lbs)		
Operating temperature range	-25 °C ...+60 °C (-13 °F ...+140 °F)		
Storage temperature range	-40 °C ...+70 °C (-40 °F ...+158 °F)		
Audible noise emissions (full power @ 1m and 25 °C)	65 dB(A)		
Internal consumption at night	5 W		
Topology	Transformerless		
Cooling concept	OptiCool (forced convection, variable speed fans)		
Enclosure protection rating	Type 4X, 3S3 (as per UL 50E)		
Maximum permissible relative humidity (non-condensing)	100%		
Additional information			
Mounting	Free-standing with included mounting feet		
DC connection	Amphenol UTX PV connectors		
AC connection	Screw terminals - 4 AWG to 4/0 AWG CU/AL		
LED indicators (Status / Fault / Communication)	●		
Network interfaces: Ethernet / WLAN / RS485	● (2 ports) / ● / O		
Data protocols: SMA Modbus / SunSpec Modbus / Webconnect	●/●/●		
ShadeFix technology for string level optimization	●		
Intelligent string performance monitoring	●		
I-V curve diagnostic function	●		
Integrated Plant Control / Q on Demand 24/7	●/●		
SMA Smart Connected (proactive monitoring and service support)	●		
Certifications			
Certifications and approvals	UL 1741, UL 1699B Ed. 1, UL 1998, CSA 22.2 107.1, PV Rapid Shutdown System Equipment		
FCC compliance	FCC Part 15 Class A		
Grid interconnection standards	IEEE 1547, UL 1741 SA - CA Rule 21, HECO Rule 14H		
Advanced grid support capabilities	L/HFRT, L/HVRT, Volt-VAr, Volt-Watt, Frequency-Watt, Ramp Rate Control, Fixed Power Factor		
Warranty			
Standard	10 years		
Optional extensions	15 / 20 years		
O Optional features ● Standard features – Not available			
Type designation	STP 33-US-41	STP 50-US-41	STP 62-US-41

Accessories

SMA Data Manager M EDMM-US-10 | SMA Sensor Module MD.SENsUS-40 | Universal Mounting System UMS_KIT-10 | AC Surge Protection Module Kit AC_SPD_KIT1-10, AC_SPD_KIT2_T1T2; DC Surge Protection Module Kit DC_SPD_KIT4-10, DC_SPD_KIT3_T1T2

Toll Free +1 888 4 SMA USA
www.SMA-America.com

SMA America, LLC

© 2019 SMA America, LLC. All rights reserved. Specifications subject to change without notice. Product shown may differ from actual product. Version 1.0

Cut Sheet

IRONRIDGE

BX Chassis (5 Degree)

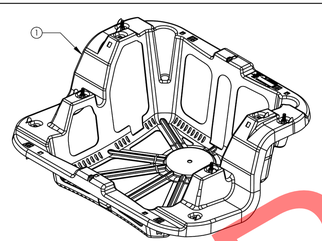

ITEM NO.	DESCRIPTION	Qty. in Kit
1	BX CHASSIS 5 DEG ASSEMBLY	1

Part Number	Description
BX-5D-510	BX Chassis 5 deg

1) BX CHASSIS 5 DEG ASSEMBLY

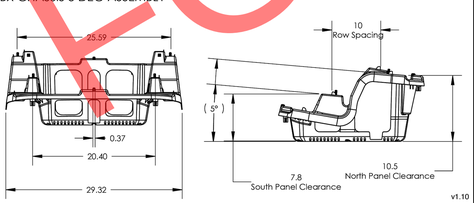

v1.10

Cut Sheet

Property	Value
Material	BASF ULTRAMID 8233GHS
Finish	Black

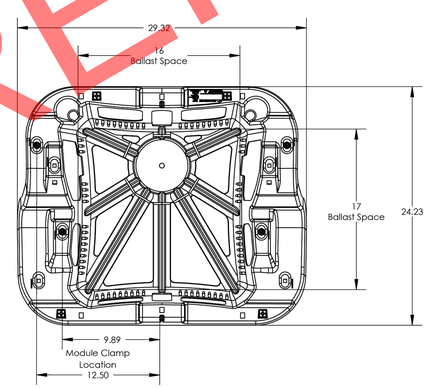

v1.10

Datasheet

IRONRIDGE

BX System

Uniquely shaped for flat roofs.

IronRidge BX delivers superior power density and design flexibility to flat roof solar arrays. Made of a glass-reinforced composite, the BX Chassis is engineered for extreme structural loading, yet is also shaped to be roof-friendly and easy to install.

Certified BX plan sets can be obtained instantly through an online Design Assistant or by contacting IronRidge Commercial Services.

Glass-Reinforced Composite
Corrosion-free and engineered for long-term structural performance.

Commercial Services
Engineering support to optimize system design.

Class A Fire Rating
Certified to maintain the fire resistance rating of the existing roof.

Design Assistant
Online software makes it simple to create, share, and price projects.

UL 2703 Listed System
Entire system and components meet newest effective UL 2703 standard.

25-Year Warranty
Products guaranteed to be free of impairing defects.

Datasheet

Chassis

5° Chassis

Ballasted mounting for 5 degree tilt angle.
- Max load spreading design
- Fully encloses ballast
- 360 degree drainage

10° Chassis

Ballasted mounting for 10 degree tilt angle.
- Max load spreading design
- Fully encloses ballast
- 360 degree drainage

Top Clamp

Combines with Bottom Clamp for top-bottom module grip.
- Secures above module
- One-tool attachment
- Mill aluminum 6000 series

Bottom Clamp

Combines with Top Clamp to up structural connection.
- Secures below module
- One-tool attachment
- Mill aluminum 6000 series

Grounding

8" Mod Bonding Jumper

Bond adjacent modules in the array.
- Press-on installation
- Tin-plate copper wire
- Factory crimped connection

38" Row Bonding Jumper

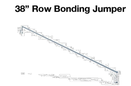

Complete row-to-row bonding in the array.
- Press-on installation
- Tin-plate copper wire
- Factory crimped connection

MLPE Mounting Hardware

Optional mounting hardware for MLPE devices.
- Cap screw and cage nut
- 5/16" socket install
- Stainless steel 300 series

PV Mod Grounding Lug

Connect arrays to equipment ground.
- Low profile
- Mounts to module frame
- One per continuous array

Accessories

Cable Tie

Complete wire management with weatherproof ties.
- UV stabilized polyamide
- 12" length, bundle of 100
- Black finish

Edge Clip Cable Tie

Manage wires underneath module and Chassis flange.
- Clips to module & Chassis
- UV stabilized polyamide
- Black finish

String Inverter Mount Kit

Create mounting platform for inverters.
- Chassis, XR10 rail, hdw
- Up to 4' inverter base
- Raises inverter off deck

Flat Roof Attachment Kit

Add anchors to ballasted system.
- Includes hardware
- For ballast-attached hybrid
- Uses locally-sourced strut

Resources

Design Assistant
Go from rough layout to fully engineered system in minutes.
Go to IronRidge.com

Tech Support
Get help when you need it, regarding installation, design, and anything else.
Call 1-800-227-9523

© 2019 IronRidge, Inc. All rights reserved. Version 1.0

FOR REFERENCE ONLY

Alternative Energy Southeast

CONTRACTOR

ALTERNATIVE ENERGY SOUTHEAST, INC.
PHONE: (770) 490-6178
LIC. NO.: EN216661

UNAUTHORIZED USE OF THIS DRAWING SET WITHOUT WRITTEN PERMISSION FROM CONTRACTOR IS IN VIOLATION OF U.S. COPYRIGHT LAWS AND WILL BE SUBJECT TO CIVIL DAMAGES AND PROSECUTIONS.

REVISION / RELEASE

NO.	DESCRIPTION	DATE

PROJECT

NEW PV SYSTEM: 486.140 kWp DC

GROVES K-12 SOLAR PV

100 PRISCILLA D. THOMAS WAY
GARDEN CITY, GA 31408

ENGINEER OF RECORD

PAPER SIZE: 36" x 24" (ARCH D)

SHEET TITLE:
RESOURCE DOCUMENTS
(SHEET 12)

DATE: 7.11.2023
DESIGN BY: SC
CHECKED BY: C.B.
SHEET NUMBER:
R-001.00